CÔNG TY CỔ PHẦN CÔNG NGHỆ HỢP LONG

Autonics

2-Phase Closed-Loop Stepper Motor Driver
AiSA-D SERIES

INSTRUCTION MANUAL

CE

Thank you for choosing our Autonics product.
Please read the following safety considerations before use.

■ Safety Considerations

※Please observe all safety considerations for safe and proper product operation to avoid hazards.
※⚠ symbol represents caution due to special circumstances in which hazards may occur.

⚠ Warning Failure to follow these instructions may result in serious injury or death.
⚠ Caution Failure to follow these instructions may result in personal injury or product damage.

⚠ Warning

1. **Fail-safe device must be installed when using the unit with machinery that may cause serious injury or substantial economic loss. (e.g. nuclear power control, medical equipment, ships, vehicles, railways, aircraft, combustion apparatus, safety equipment, crime/disaster prevention devices, etc.)**
   Failure to follow this instruction may result in fire, personal injury, or economic loss.
2. **Do not connect, repair, or inspect the unit while connected to a power source.**
   Failure to follow this instruction may result in fire.
3. **Install the unit after considering counter plan against power failure.**
   Failure to follow this instruction may result in personal injury, or economic loss.
4. **Re-supply power after min. 20 sec from disconnected power.**
   Failure to follow this instruction may result in product damage or malfunction.
5. **Check 'Connections' before wiring.**
   Failure to follow this instruction may result in fire.
6. **For installing the unit, ground it exclusively and use over AWG 18 (0.75mm²) ground cable.**
   Failure to follow this instruction may result in electric shock.
7. **Do not disassemble or modify the unit.**
   Failure to follow this instruction may result in electric shock, or fire.
8. **Insulate the connector not to be exposed.**
   Failure to follow this instruction may result in electric shock.
9. **Install the driver in the grounded housing or ground it directly.**
   Failure to follow this instruction may result in electric shock, personal injury, or fire.
10. **Do not touch the unit during or after operation for a while.**
    Failure to follow this instruction may result in electric shock, or burn due to high temperature of the surface.
11. **Do not remove the connector during or after operation for a while.**
    Failure to follow this instruction may result in electric shock, or product damage.
12. **Emergency stop directly when error occurs.**
    Failure to follow this instruction may result in fire, or personal injury.

⚠ Caution

1. **When connecting the power input, use AWG 18 (0.75mm²) cable or over.**
2. **Install over-current prevention device (e.g. the current breaker, etc) to connect the driver with power.**
   Failure to follow this instruction may result in fire.
3. **Check the control input signal before supplying power to the driver.**
   Failure to follow this instruction may result in personal injury or product damage by unexpected signal.
4. **Install a safety device to maintain the vertical position after turn off the power of this driver.**
   Failure to follow this instruction may result in personal injury or product damage by releasing holding torque of the motor.
5. **Use the unit within the rated specifications.**
   Failure to follow this instruction may result in fire or product damage.
6. **Use dry cloth to clean the unit, and do not use water or organic solvent.**
   Failure to follow this instruction may result in electric shock or fire.
7. **Do not use the unit in the place where flammable/explosive/corrosive gas, humidity, direct sunlight, radiant heat, vibration, impact, or salinity may be present.**
   Failure to follow this instruction may result in fire or explosion.
8. **The driver may overheat depending on the environment.**
   Install the unit in the well ventilated place and forced cooling with a cooling fan.
   Failure to follow this instruction may result in product damage and degradation.
9. **Keep metal chip, dust, and wire residue from flowing into the unit.**
   Failure to follow this instruction may result in fire or product damage.
10. **Use the designated motor only.**
    Failure to follow this instruction may result in fire or product damage.

■ Ordering Information

Ai S A - D - 60 M A

- Series: Ai — Artificial intelligence
- Category: S — Standard
- Voltage: A — AC power
- Item: D — Driver
- Motor frame size: 60 — 60×60mm; 86 — 86×86mm
- Motor length: M — 82.8mm; L — 103.8mm; M — 94.9mm; L — 109.4mm
- Encoder resolution: A — 10,000PPR (2,500PPR×4-multiply)

◎ AiSA Series

Set	Driver	Motor
AiSA-60MA	AiSA-D-60MA	AiA-M-60MA
AiSA-60LA	AiSA-D-60LA	AiA-M-60LA
AiSA-86MA	AiSA-D-86MA	AiA-M-86MA
AiSA-86LA	AiSA-D-86LA	AiA-M-86LA

※The above specifications are subject to change and some models may be discontinued without notice.
※Be sure to follow cautions written in the instruction manual and the technical descriptions (catalog, homepage).

■ Specifications

Model		AiSA-D-60MA	AiSA-D-60LA	AiSA-D-86MA	AiSA-D-86LA
Power supply		200-240VAC～ 50/60Hz			
Power consumption	STOP※1	Max. 60W		Max. 65W	Max. 70W
	Max. during operation※2	Max. 160W	Max. 220W	Max. 250W	Max. 300W
Max. RUN current※3		2.0A/Phase			
STOP current		20% or 30% of max. RUN current (factory default: 30%)			
Rotation speed		0 to 3000rpm			
Resolution		500 (factory default), 1000, 1600, 2000, 3200, 3600, 5000, 6400, 7200, 10000PPR			
Motor GAIN		Within the range of motor gain: 1 to 32			
In-Position		Within the range of Fast response: 0 to 7 or Accurate response: 0 to 7			
Pulse input method		1-pulse or 2-pulse input (factory default) method			
Motor rotation direction		CW (factory default), CCW			
Status display		● Power/Alarm indicator: green/red LED ● In-Position indicator: orange LED ● Servo On/Off indicator: blue LED ● Alarm/Status display part: red LED 7seg.			
Input signal		RUN pulse, Servo On/Off, alarm reset (photocoupler input)			
Output signal		In-Position, alarm out (photocoupler output), Encoder signal (A, $\bar{A}$, B, $\bar{B}$, Z, $\bar{Z}$ phase, corresponding to 26C31) (line driver output)			
Input pulse specifications	Pulse width	CW, CCW: input pulse frequency duty 50%, Servo On/Off: min. 1ms, alarm reset: min. 20ms			
	Rising/Falling time	CW, CCW: max. 0.5μs			
	Pulse input voltage	CW, CCW - [H]: 4-8VDC⎓, [L]: 0-0.5VDC Servo On/Off, alarm reset - [H]: 24VDC⎓, [L]: 0-0.5VDC			
	Max. input pulse freq.※4	CW, CCW: 500kHz			
Input resistance		220Ω (CW, CCW), 10kΩ (Servo On/Off, alarm reset)			
Insulation resistance		Over 100MΩ (at 500VDC megger)			
Dielectric strength		1,500VAC 50/60Hz for 1 min			
Vibration		1.5mm amplitude at frequency of 10 to 55Hz (for 1 min) in each X, Y, Z direction for 2 hours			
Shock		300m/s² (approx. 30G) in each X, Y, Z direction for 3 times			
Environment	Ambient temp.	0 to 50°C, storage: -10 to 60°C			
	Ambient humi.	35 to 85%RH, storage: 10 to 90%RH			
Approval		CE			
Protection structure		IP20 (IEC standard)			
Weight※5		Approx. 900g (approx. 780g)			

※1: Based on the ambient temperature 25°C, ambient humidity 55%RH, and STOP current 30%.
※2: Max. power consumption during operation. When changing the load rapidly, instantaneous peak current may increase. The capacity of power supply should be over 1.5 to 2 times of max. power consumption.
※3: RUN current varies depending on the input RUN frequency and max. RUN current at the moment varies also.
※4: Max. input pulse frequency is max. frequency to be input and is not the same as max. pull-out frequency or max. slewing frequency.
※5: The weight includes packaging. The weight in parenthesis is for unit only.
※Environment resistance is rated at no freezing or condensation.

■ Driver Setting

◎ SW1: Function selection DIP switch

-Set rotation direction, pulse input method, STOP current, gain setting, and test mode.

Setting switch	No.	Name	Function	Switch position ON	Switch position OFF (factory default)
	1	DIR	Rotation direction	CCW	CW
	2	1P/2P	Pulse input method	1-pulse input method	2-pulse input method
	3	CD	STOP current	20% of max. RUN current	30% of max. RUN current
	4	GM	Gain setting	High gain	Low gain
	5※1	RVD	Test mode	Test mode	Normal mode

※1: Set to OFF when using the device. It is only for the operation test in manufacturing process.

● **Pulse input method**

※1-pulse input method
-CW: Rotation operation signal input
-CCW: Rotation direction signal input
([H]: Forward rotation, [L]: Reverse rotation)

※2-pulse input method
-CW: Forward rotation signal input
-CCW: Reverse rotation signal input

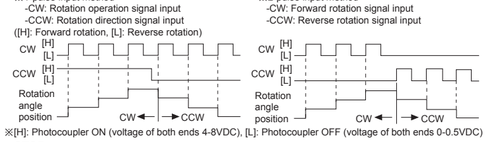

※[H]: Photocoupler ON (voltage of both ends 4-8VDC), [L]: Photocoupler OFF (voltage of both ends 0-0.5VDC)

● **STOP current**
-In order to decrease motor heat and current consumption at motor stopping moment (in case there is no input during the time of the double width of last input pulse), set the stop current supplied to the motor phase.

◎ SW2: Resolution setting switch

-Set the resolution of driver.
-The number of pulses per 1 rotation by resolution is each 500, 1000, 1600, 2000, 3200, 3600, 5000, 6400, 7200, 10000.
-Modified setting values are not applied in the running status, and the values will be applied after motor stopped.

Setting switch	Setting	Pulse/Revolution	Resolution
RES	0 (factory default)	500	2.5
	1	1000	5
	2	1600	8
	3	2000	10
	4	3200	16
	5	3600	18
	6	5000	25
	7	6400	32
	8	7200	36
	9	10000	50

◎ SW3: Motor gain setting switch

-SW3 shifts motor gain between high and low, depending on 4th pin in SW1.

● **Motor gain**
-Motor gain is selectable from 32 gains.
-The larger gain is, the more improved transient response becomes and the less error occurs.
※At the lowest system load status, raise the gain value until motor vibrates and set to 1 to 2 level lower.

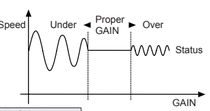

Setting switch	4th pin in SW1=OFF Setting	GAIN	Setting	GAIN	4th pin in SW1=ON Setting	GAIN	Setting	GAIN
GAIN	0	×1	8	×9	0	×17	8	×25
	1	×2	9	×10	1	×18	9	×26
	2	×3	A	×11	2	×19	A	×27
	3	×4	B	×12	3	×20	B	×28
	4	×5	C	×13	4	×21	C	×29
	5	×6	D	×14	5	×22	D	×30
	6	×7	E	×15	6	×23	E	×31
	7	×8	F	×16	7	×24	F	×32

◎ SW4: In-Position setting switch

-After position command pulse has finished, if the gap between target position and real position is under In-Position setting value, positioning completion pulse is output.
-Modified setting values are not applied in the running status, and the values will be applied after motor stopped.

Setting switch	Fast Response Setting	Value	Accurate Response Setting	Value
INP	0※1	0	8	0
	1	±1	9	±1
	2	±2	A	±2
	3	±3	B	±3
	4	±4	C	±4
	5	±5	D	±5
	6	±6	E	±6
	7	±7	F	±7

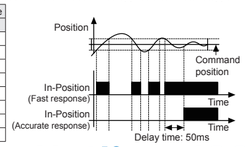

※1: Factory default

■ Dimensions

(unit: mm)

◎ **Panel cut-out**

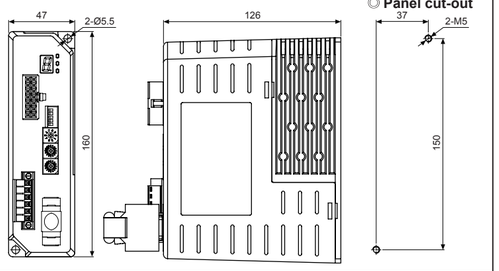

■ Driver Unit Descriptions

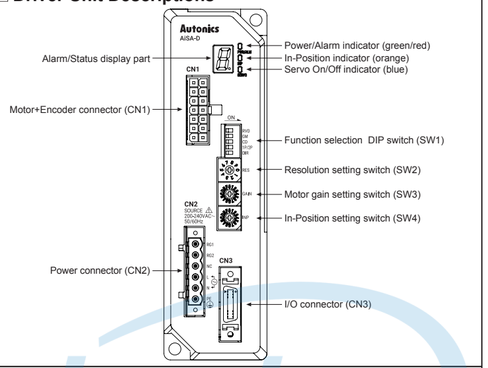

■ Status Display

Indicator & Display part	LED color	Function	Descriptions
PWR/ALM	Green	Power indicator	Turns ON when the unit operates normally after supplying power
	Red	Alarm indicator	When alarm occurs, it flashes in various ways depending on the situation. Refer to '■ Control Input/Output > ◎ Output > **2. Alarm**'.
INP	Orange	In-Position indicator	Turns ON when motor is placed at command position after positioning input.
SERVO	Blue	Servo On/Off indicator	Turns ON when Servo is operating, turns OFF when servo is not operating.
Alarm/Status display part	Red	Alarm, status indicator	When alarm occurs, it displays number of the corresponding alarm and the setting number of the rotary switches (RES/GAIN/INP)

■ Driver Connectors

◎ Connector function

● **CN1: Motor+Encoder connector**

Pin arrangement	Pin No.	Function	Pin No.	Function
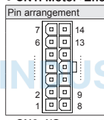	1	GND	8	+5VDC
	2	Encoder A	9	Encoder $\bar{A}$
	3	Encoder B	10	Encoder $\bar{B}$
	4	Encoder Z	11	Encoder $\bar{Z}$
	5	PE	12	N·C
	6	Motor A	13	Motor B
	7	Motor $\bar{A}$	14	Motor $\bar{B}$

● **CN2: Power connector**

Pin arrangement	Pin No.	Function
	1	Regenerative resistance
	2	
	3	N·C
	4	Power
	5	
	6	PE

● **CN3: I/O connector**

Pin arrangement	Pin No.	Input/Output	Function	Pin No.	Input/Output	Function
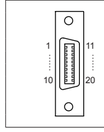	1	Input	CW+	11	Output	In-Position+
	2	Input	CW-	12	Output	In-Position-
	3	Input	CCW+	13	—	N·C
	4	Input	CCW-	14	—	N·C
	5	Input	Servo On/Off+	15	Output	Encoder A
	6	Input	Servo On/Off-	16	Output	Encoder $\bar{A}$
	7	Output	Alarm Out+	17	Output	Encoder B
	8	Output	Alarm Out-	18	Output	Encoder $\bar{B}$
	9	Input	Alarm Reset+	19	Output	Encoder Z
	10	Input	Alarm Reset-	20	Output	Encoder $\bar{Z}$

◎ Connector specifications

Type		Specifications Connector	Connector terminal	Housing	Manufacture
CN1	Motor+Encoder	5557-14R	5556T	—	Molex
CN2	Power	5ESDVM-06P-OR	—	—	Dinkle
CN3	I/O connector	10120-3000PE	—	10320-52F0-008	3M
		CJ-MP20-HP□ (sold separately)	—	—	Autonics

※Above connectors are suitable for AiSA-D Series.

◎ Cable (sold separately)

Type	Model							
I/O cable	CJ-MP20-HP□※1 (sold separately, standard: AiS TAG)							
	Pin No.	Function (name tag)	Cable color	Dot line color-numbers	Pin No.	Function (name tag)	Cable color	Dot line color-numbers
	1	CW+	Yellow	Black-1	11	IN POSITION+	White	Black-1
	2	CW-		Red-1	12	IN POSITION-		Red-1
	3	CCW+		Black-2	13	—		Black-2
	4	CCW-		Red-2	14	—		Red-2
	5	SERVO ON/OFF+		Black-3	15	ENCODER A+		Black-3
	6	SERVO ON/OFF-		Red-3	16	ENCODER A-		Red-3
	7	ALARM OUT+		Black-4	17	ENCODER B+		Black-4
	8	ALARM OUT-		Red-4	18	ENCODER B-		Red-4
	9	ALARM RESET+		Black-5	19	ENCODER Z+		Black-5
	10	ALARM RESET-		Red-5	20	ENCODER Z-		Red-5
Motor+Encoder cable	Normal	C1D14M-□※2						
	Moving	C1DF14M-□※2						

※1: □ indicates cable length (010, 020).
For corresponding EMC standard, cable length should be below 2m.
E.g.) CJ-MP20-HP020: 2m I/O cable
※2: □ indicates cable length (1, 2, 3, 5, 7, 10) E.g.) C1DF14M-10: 10m moving type motor+encoder cable.
※It is recommended to use ferrite core at I/O cable and Motor+Encoder cable.

■ Control Input/Output

Inner signal of all input/output consists of photocoupler.
ON, [H]: photocoupler power ON
OFF, [L]: photocoupler power OFF

◎ Input

1. Position command pulse
-Pulse input is selectable from 1-pulse input method and 2-pulse input method.
(Refer to '◎ SW1: Function selection DIP switch'.)
-When using extending cable, it is recommended to connect Common mode choke coil (2mH) to the CW, CCW terminal in series connection.

2. Servo On/Off
-This signal is for rotating axis of motor using external force or used for manual positioning.
-Servo On/Off signal maintains over 1ms as [H]
: Regarded as Servo Off signal and phase current is cut to release torque.
The Servo ON indicator, the In-Position output and indicator turns OFF.
-Servo On/Off signal maintains over 1ms as [L]
: Regarded as Servo On signal and phase current is supplied to gain torque.
The Servo ON indicator, the In-Position output and indicator turns ON.
※Stop the motor for using the signal.
※Refer to example of input circuit connection.

3. Alarm Reset
-This signal is for clearing the alarm.
-Alarm reset signal maintains over 20ms as [H]
: Alarm is cleared, the alarm indicator and alarm output turns OFF, and the driver returns to normal status.
※If the causes of the alarm are not removed, driver may not be returned to the normal status even with alarm reset.
※Refer to example of input circuit connection.

4. Example of input circuit connection

● Input pulse (CW, CCW)
-It is recommended to use 5VDC at V_{CC} and short the R_L.
-In case V_{CC} is over 5VDC, calculate R_L value using following formula and use V_{CC} below 30VDC.

※$R_L = \frac{V_{CC}-2.17V}{0.011A} - 220\Omega$

-In case V_{cc} is 12, 24VDC, refer to table on the right for R_L.

V_{CC}	R_L
12VDC	680Ω (min. 0.25W)
24VDC	1.8kΩ (min. 0.5W)

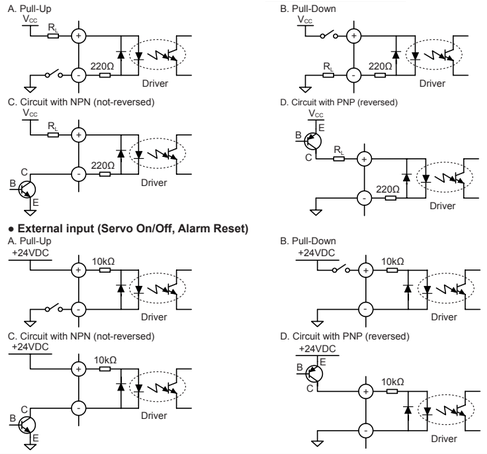

● **External input (Servo On/Off, Alarm Reset)**

■ Connection for Motor and Driver

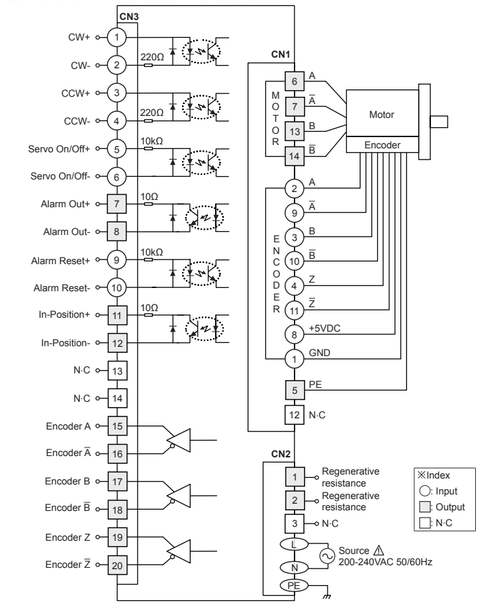

■ Options for Power Connector (CN2)

Options	Model	Specifications	Manufacture
Regenerative resistance	IRC100	● Resistance: 100Ω ±5%, ● Rated power: 60W(standby), 100W(with heatsink)	RARA Electronics Corp.
	Used when the load inertia is large or the deceleration time is short. Forced cooling is required when the surface temperature of the regenerative resistor is high.		
Noise filter	RNS-2010	● Rated voltage: 250V ● Rated current: 10A ● Max. leakage current: 1mA	Orient Electronics
	Connect the unit to the power side to suppress external noise. Keep wiring as short as possible, and must ground it when connecting power.		
Surge protector	LT-C12G801W	—	OTOWA Electric CO. Ltd
	Connect the unit to the power side to protect the product from external noise and surge.		

※Use the unit which is commercially available.

◎ Output

1. In-Position
-In-Position output is output condition of positioning completion signal.
-If the gap between target position and real position is under In-Position setting value after position command pulse has finished, In-Position output turns to [H] and the In-Position indicator turns ON.
-In reverse, when the gap is over In-Position setting value, In-Position output turns to [L] and the In-Position indicator turns OFF.
-For accurate drive, check the In-Position output again and execute the next drive.
※Refer to example of output circuit connection.

2. Alarm/Warning

● **Alarm**
-This function stops motor to protect driver, depending on the error status such as over current or over speed.
-In case of normal status, output is [H], and in case of alarming status, output is [L].
-When supplying alarm reset, driver returns to the normal status.
※Refer to example of output circuit connection.

● **Alarm/Status display**
-When alarm occurs, the alarm indicator (ALM, red) flashes as the times of corresponding alarm type.
-The alarm/status display part displays the number of the corresponding alarm type.

ALM flashing times	Alarm/Status	Alarm type	Descriptions	Motor stop	Maintain torque
1	1	Over current error	When over current flows at motor RUN element	○	×
2	2	Over speed error	When motor speed is over 3,500rpm		
3	3	Position tracking error	When the gap between position command value and current position value is over 90°		
4	4	Over load error	When applying load over the rated load for over 1 sec		
5	5	Over heat error	When heatsink temperature is over 90°C		
6	6	Motor connection error	When motor cable connection error occurs at driver		
7	7	Encoder connection error	When encoder cable connection error occurs at driver		
8	8	Overvoltage error	When input voltage is over 240VAC +10%		
9	9	Undervoltage error※1	When input voltage is under 200VAC -10%		
10	A	Motor misalignment	When motor is in misalignment		
11	b	Command pulse error	When input pulse is over 3,500rpm		
			When pulse is input before initial alignment		
12	C	In-Position error	When position error (over 1) is kept over 3 sec, after motor stopped.		

※1: When cutting off the power, the undervoltage error occurring is normal operation.
※Depending on the alarm type, it flashes for 0.4 sec interval and it turns OFF for 0.8 sec repeatedly.

<E.g. case of alarm 3>

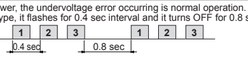

3. Example of output circuit connection
-It is recommended to use below 50VDC at V_{CC}. Use the R_L for I_C (collector current of secondary detector) of photocoupler inside the driver to be within 25mA following the below formula.

※A: $R_L = \frac{V_{CC}-0.3V-V_F}{0.025A} - 10\Omega$ ※B, C: $R_L = \frac{V_{CC}-0.3V}{0.025A} - 10\Omega$

(V_F is LED forward voltage of primary photocoupler.)

A. Circuit with photocoupler

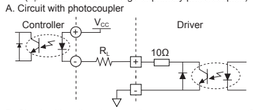

B. Circuit with pull up (reversed)

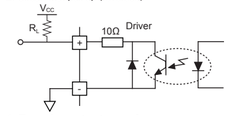

C. Circuit with pull down (not-reversed)

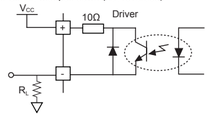

4. Encoder output waveforms

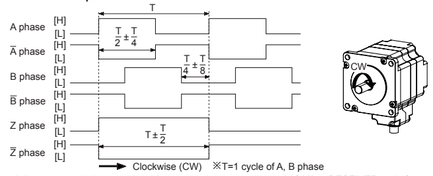

※It is recommended to use Line driver output (corresponding to 26C32) at RECEIVER end of encoder output and terminating resisters (100-150Ω) in parallel at both ends of each phase (A, $\bar{A}$, B, $\bar{B}$, Z, $\bar{Z}$, corresponding to 26C31).
※T=1 cycle of A, B phase

■ Troubleshooting

1. When motor does not rotate
①Check the connection status between controller, driver, and brake, and pulse input specifications (voltage, width).
②Check that pulse and direction signal are connected correctly.
2. When motor rotates to the opposite direction of the designated direction
①When RUN mode is 1-pulse input method, CCW input [H] is for forward, [L] is for backward.
②When RUN mode is 2-pulse input method, check CW and CCW pulse input are changed or not.
3. When motor drive is unstable
①Check that driver, motor, and brake are connected correctly.
②Check the driver pulse input specifications (voltage, width).

■ Cautions during Use

1. Follow instructions in 'Cautions during Use'. Otherwise, it may cause unexpected accidents.
2. Do not input CW, CCW signal at the same time in 2-pulse input method.
3. When the signal input voltage is exceeded the rated voltage, connect additional resistance at the outside.
4. To extend the motor+encoder cable, use the designated the cable.
5. Keep the distance between power cable and signal cable more than 10cm.
6. Install the unit vertically on the alarm/status display part upper side.
7. For heat radiation of the driver, install a fan.
8. Do not change any setting switches (function, resolution, motor gain, in-position switches) during the operation or after supplying power.
   Failure to follow this instruction may result in malfunction.
9. Motor vibration and noise can occur in specific frequency period
   ①Change motor installation method or attach the damper.
   ②Use and set the gain value.
10. For using motor, it is recommended to maintenance and inspection regularly.
    ①Unwinding bolts and connection parts for the unit installation and load connection
    ②Strange sound from ball bearing of the unit
    ③Damage and stress of lead cable of the unit
    ④Connection error with motor
    ⑤Inconsistency between the axis of motor output and the center, concentric (eccentric, declination) of the load, etc.
11. This product does not prepare protection function for a motor.
12. This unit may be used in the following environments.
    ①Indoors (in the environment condition rated in 'Specifications') ②Altitude max. 2,000m
    ③Pollution degree 2 ④Installation category II

■ Major Products

■ Photoelectric Sensors
■ Fiber Optic Sensors
■ Door Sensors
■ Door Side Sensors
■ Area Sensors
■ Proximity Sensors
■ Pressure Sensors
■ Rotary Encoders
■ Connector/Sockets
■ Switching Mode Power Supplies
■ Control Switches/Lamps/Buzzers
■ I/O Terminal Blocks & Cables
■ Stepper Motors/Drivers/Motion Controllers
■ Graphic/Logic Panels
■ Field Network Devices
■ Laser Marking System (Fiber, CO_2, Nd: YAG)
■ Laser Welding/Cutting System
■ Temperature Controllers
■ Temperature/Humidity Transducers
■ SSRs/Power Controllers
■ Counters
■ Timers
■ Panel Meters
■ Tachometer/Pulse (Rate) Meters
■ Display Units
■ Sensor Controllers

Autonics Corporation
http://www.autonics.com
■ HEADQUARTERS:
18, Bansong-ro 513 beon-gil, Haeundae-gu, Busan, South Korea, 48002
TEL: 82-51-519-3232
■ E-mail: sales@autonics.com

Hotline: 1900.6536 - Website: HOPLONGTECH.COM